Please write clearly in block capitals.

Centre number | | | | | | Candidate number | | | | |

Surname _____

Forename(s) _____

Candidate signature _____
I declare this is my own work.

GCSE
DESIGN AND TECHNOLOGY

Unit 1 Written Paper

Time allowed: 2 hours

For Examiner's Use	
Section	Mark
A	
B	
C	
TOTAL	

Materials
For this paper you must have:
- normal writing and drawing instruments
- a calculator
- a protractor.

Instructions
- Use black ink or black ball-point pen. Use pencil only for drawing.
- Fill in the boxes at the top of this page.
- Answer **all** questions.
- You must answer the questions in the spaces provided. Do not write outside the box around each page or on blank pages.
- If you need extra space for your answer(s), use the lined pages at the end of this book. Write the question number against your answer(s).
- Do all rough work in this book. Cross through any work you do not want to be marked.

Information
- The marks for questions are shown in brackets.
- The maximum mark for this paper is 100.
- There are 20 marks for Section A, 30 marks for Section B and 50 marks for Section C.

Do not write outside the box

Section A – Core technical principles

Answer **all** questions in this section.

Each of Questions **01** to **10** is followed by four responses, **A**, **B**, **C** and **D**.

For each question completely fill in the circle alongside the appropriate answer.

CORRECT METHOD ⬬ WRONG METHODS

If you want to change your answer you must cross out your original answer as shown.

If you wish to return to an answer previously crossed out, ring the answer you now wish to select as shown.

0 1 Conductive textiles could be used to

A burn at high temperatures. ⬭

B change colour. ⬭

C illuminate Light Emitting Diodes. ⬭

D resist bullets. ⬭

[1 mark]

0 2 Micro encapsulation is used to make fabric

A anti-bacterial. ⬭

B conductive. ⬭

C fire proof. ⬭

D stronger. ⬭

[1 mark]

Do not write outside the box

0 3 A malleable material is one that

A can be pressed into a shape or form. ⬭

B is able to withstand scratches and indents. ⬭

C is hard to break or snap. ⬭

D rusts with exposure to air and moisture. ⬭

[1 mark]

0 4 When using marker pens, students find the ink stains other pages.

Which term should be looked for when selecting the paper to avoid this?

A Bleed proof ⬭

B Cartridge ⬭

C Layout ⬭

D Tracing ⬭

[1 mark]

0 5 Which component is the **output** in a temperature warning system?

A Lamp ⬭

B Microcontroller ⬭

C Switch ⬭

D Temperature sensor ⬭

[1 mark]

Turn over for the next question

Do not write outside the box

0 6 Which **one** of the following is ferrous?

A Aluminium ⬭

B Copper ⬭

C Iron ⬭

D Tin ⬭

[1 mark]

0 7 Identify the material shown in **Figure 1**.

Figure 1

A Balsa ⬭

B Chipboard ⬭

C Medium density fibreboard (MDF) ⬭

D Plywood ⬭

[1 mark]

Do not write outside the box

0 8 Which **one** of the following is a renewable resource?

A Metal ore ⬭

B Natural gas ⬭

C Oil ⬭

D Water ⬭

[1 mark]

0 9 A tough material is described as one that can

A bend and then return to its original shape. ⬭

B be pulled or stretched along its length. ⬭

C be shaped by pressing. ⬭

D withstand impacts without breaking. ⬭

[1 mark]

1 0 Which **one** of the following statements is **true**?

A Continuous improvement is the concept of storing waste. ⬭

B Lean working reduces efficiency. ⬭

C Global warming is due to decreasing levels of carbon dioxide. ⬭

D Pollution is created by the burning of fossil fuels. ⬭

[1 mark]

Turn over for the next question

Do not write outside the box

1 1 . 1 Name **one** specific modern material.

[1 mark]

1 1 . 2 Explain why the use of modern materials improves the function of products.

[2 marks]

Do not write outside the box

1 2 High density polyethylene (HDPE) is widely used in the manufacture of household bottles and containers.

Give **two** detailed reasons why HDPE is suitable for this type of packaging.

[2 x 2 marks]

Reason 1 _____

_____

_____

_____

Reason 2 _____

_____

_____

_____

Turn over for the next question

Do not write outside the box

1 3 Study the diagram of the mechanism for car windscreen wipers in **Figure 2**.

Figure 2

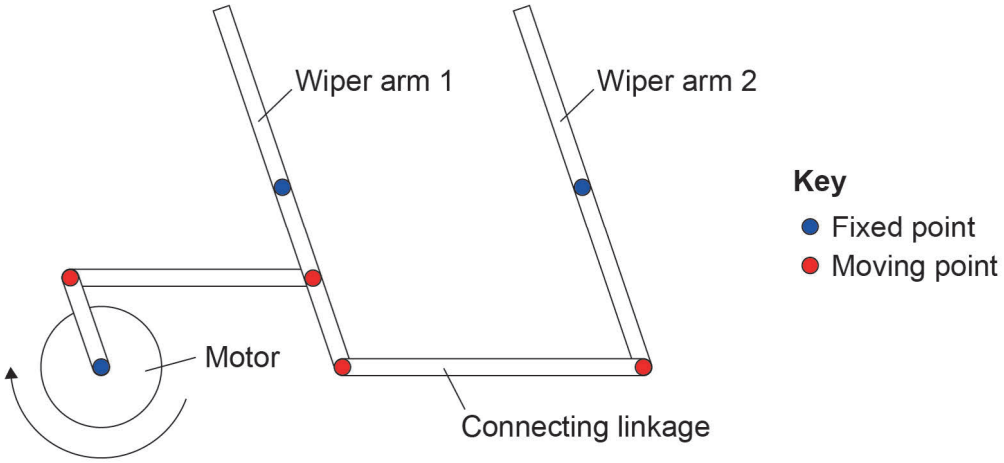

1 3 . 1 State the type of motion in Wiper arm 1.

[1 mark]

1 3 . 2 Explain the function of the connecting linkage.

[2 marks]

20

Do not write outside the box

Section B – Specialist technical principles

Answer **all** questions in this section.

1 4 **Table 1** identifies specific processes used to remove different materials and make sure materials are cut to a tolerance.

Choose **one** process from **Table 1** and, using notes and/or sketches, describe the process in detail.

[5 marks]

Table 1

Turning	**Die cutting**	**Laser cutting**	**Cutting by shearing**

My chosen process is _____

Do not write outside the box

1 5 . 1 Describe what forces are acting on the bow and arrow in **Figure 3** before it is fired.

[3 marks]

Figure 3

1 5 . 2 Explain how materials can be improved by being reinforced. Give examples.

[3 marks]

Do not write outside the box

1 6 . 1 Explain the purpose of a template.

[2 marks]

1 6 . 2 A manufacturer needs to produce a hexagonal template like the one in **Figure 4**.

The distance between points **A** and **B** needs to be 90 mm.

Figure 4

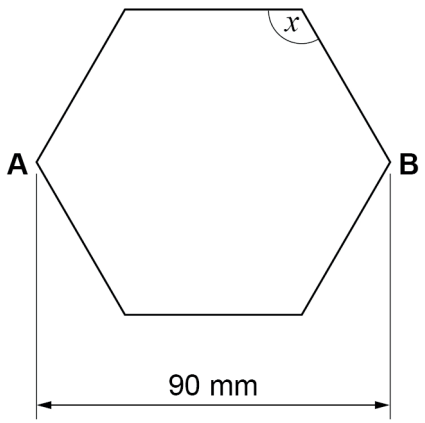

Work out the length of one side of the hexagon.

[1 mark]

1 6 . 3 Calculate the interior angle at x on the diagram.

[2 marks]

Do not write outside the box

1 7 Explain how the **two** factors given below would be considered when selecting materials or components.

[2 x 3 marks]

Availability _____

_____

_____

_____

_____

_____

Cultural and social factors _____

_____

_____

_____

_____

_____

Do not write outside the box

1 8 Carbon dioxide is released as a result of making, transporting and using a product during its lifetime. This is called a 'carbon footprint'.

Analyse and evaluate what factors contribute to carbon release or 'carbon footprint' from raw material source to final disposal.

Give examples in your answer.

[8 marks]

30

Turn over for Section C

Do not write outside the box

Section C – Designing and making principles

Answer **all** questions in this section.

1 9 Study the pictures of garden furniture and packaging in **Figure 5** and **Figure 6** and the specifications in **Table 2**.

Figure 5

Table, chairs and umbrella

Figure 6

Flat-pack furniture packaging

Table 2

Material specification for garden furniture in Figure 5	
Material	**Description of use**
Timber	Table and chairs
Fabric	Umbrella covering
Metal	Fixtures and fittings to assemble
Polymers	Umbrella stand base and end caps for chair legs
Papers and boards	Cardboard packaging and assembly instructions prior to use

Do not write outside the box

1 9 . 1 Analyse and evaluate the garden furniture and its packaging in terms of functionality.

[6 marks]

Question 19 continues on the next page

Do not write outside the box

1 9 . 2 Analyse and evaluate how the design and manufacture of garden furniture may cause deforestation and what steps can be taken to address this.

[6 marks]

Do not write outside the box

Turn over for the next question

DO NOT WRITE ON THIS PAGE
ANSWER IN THE SPACES PROVIDED

Do not write outside the box

2 0 **Figure 7** shows a structure made from a number of material lengths cut and bent to shape.

Figure 7

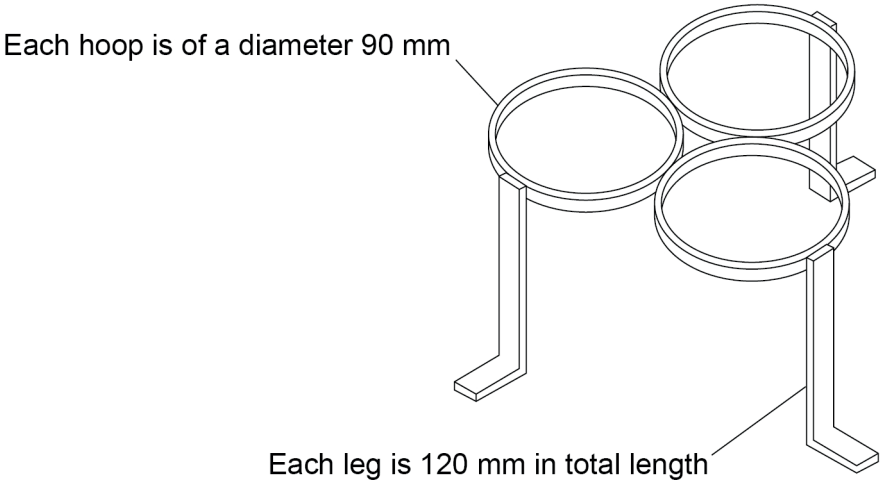

2 0 . 1 Calculate the length of material required to make **one** hoop to the nearest whole millimetre.

Show your working.

[3 marks]

Answer _____ mm

Do not write outside the box

2 0 . 2 Calculate the total length of material required to make all the parts in **Figure 7** to the nearest whole centimetre.

Show your working.

[4 marks]

Answer _____ cm

Turn over for the next question

Do not write outside the box

2 1 Materials frequently have to be deformed and reformed.

Choose **one** product from **Table 3**.

Table 3

Metal toy car	**Birthday card**	**Polymer toothbrush**

Cotton skirt	**Plywood chair**

My chosen product is _____

Do not write outside the box

2 1 . 1 Name a specific deforming or reforming process used in the manufacture of your chosen product.

[1 mark]

2 1 . 2 Explain why this process is used in the manufacture of your chosen product.

[2 marks]

2 1 . 3 What safety issues need to be considered when using the specific process given in your answer to Question **21.1**?

[2 marks]

Turn over for the next question

Do not write outside the box

2 2 . 1 Below are drawings of two parts needed to make a pencil sharpener.

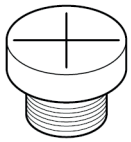

Not drawn to scale

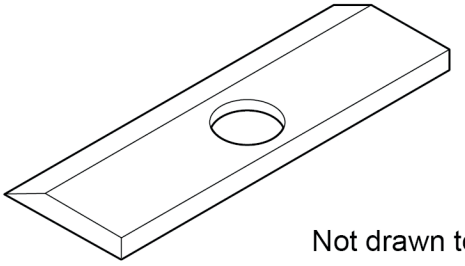

Not drawn to scale

Complete an exploded isometric drawing in **Figure 8** showing how the parts of the sharpener are assembled.

[5 marks]

Figure 8

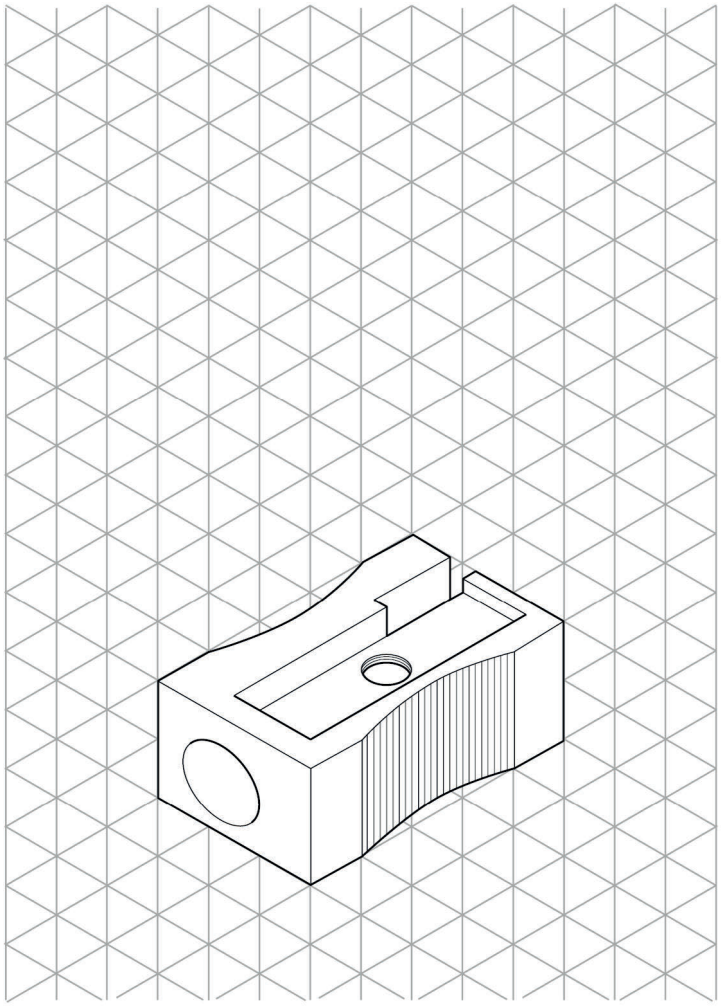

Do not write outside the box

2 2 . 2 Exploded drawings show details of an object in a unique way.

Explain where and why exploded drawings are used.

Give examples in your answer.

[4 marks]

2 3 Sketching is used by designers to communicate information.

Describe **one** advantage and **one** disadvantage of freehand sketching over computer aided design (CAD) drawing.

[2 x 2 marks]

Advantage

Disadvantage

Do not write outside the box

2 4 . 1 Define the term ‘datum point’.

[1 mark]

2 4 . 2 Explain why datum points are used during manufacturing.

[2 marks]

2 5 The images in **Table 4** are of specialist pieces of Design and Technology equipment.

Table 4

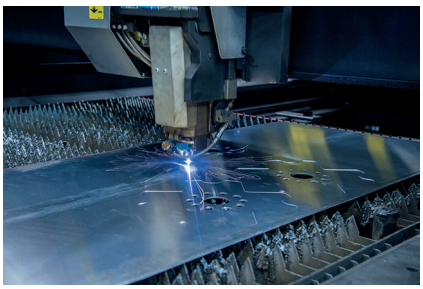		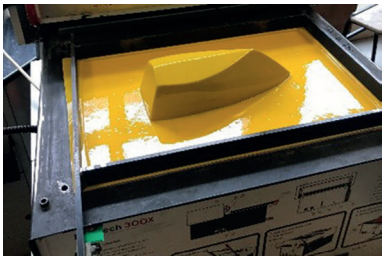
Laser cutter	**Overlocker**	**Vacuum former**
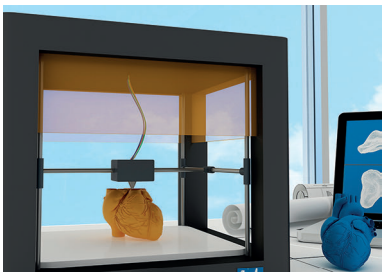		
3D printer	**Centre lathe**	

Do not write outside the box

Choose **one** piece of specialist equipment from **Table 4**.

My chosen piece of equipment is _____

2 5 . 1 Describe how your chosen piece of equipment is used.

[3 marks]

_____

_____

_____

_____

_____

_____

2 5 . 2 Explain the checks you would make to ensure the equipment is able to produce quality outcomes.

[3 marks]

_____

_____

_____

_____

_____

_____

Turn over for the next question

Do not write outside the box

2 6 Explain the importance of evaluation when developing prototypes.

Give specific examples in your answer.

[4 marks]

50

END OF QUESTIONS

Do not write outside the box

There are no questions printed on this page

DO NOT WRITE ON THIS PAGE
ANSWER IN THE SPACES PROVIDED

Do not write outside the box

Question number	**Additional page, if required.** **Write the question numbers in the left-hand margin.**

Do not write outside the box

Question number	**Additional page, if required.** **Write the question numbers in the left-hand margin.**

Do not write outside the box

Question number	**Additional page, if required.** **Write the question numbers in the left-hand margin.**

Do not write outside the box

Question number	**Additional page, if required.** **Write the question numbers in the left-hand margin.**

Do not write outside the box

There are no questions printed on this page

DO NOT WRITE ON THIS PAGE
ANSWER IN THE SPACES PROVIDED

Copyright information

For confidentiality purposes, all acknowledgements of third-party copyright material are published in a separate booklet. This booklet is published after each live examination series and is available for free download from www.aqa.org.uk.

Permission to reproduce all copyright material has been applied for. In some cases, efforts to contact copyright-holders may have been unsuccessful and AQA will be happy to rectify any omissions of acknowledgements. If you have any queries please contact the Copyright Team.

Copyright © 2022 AQA and its licensors. All rights reserved.